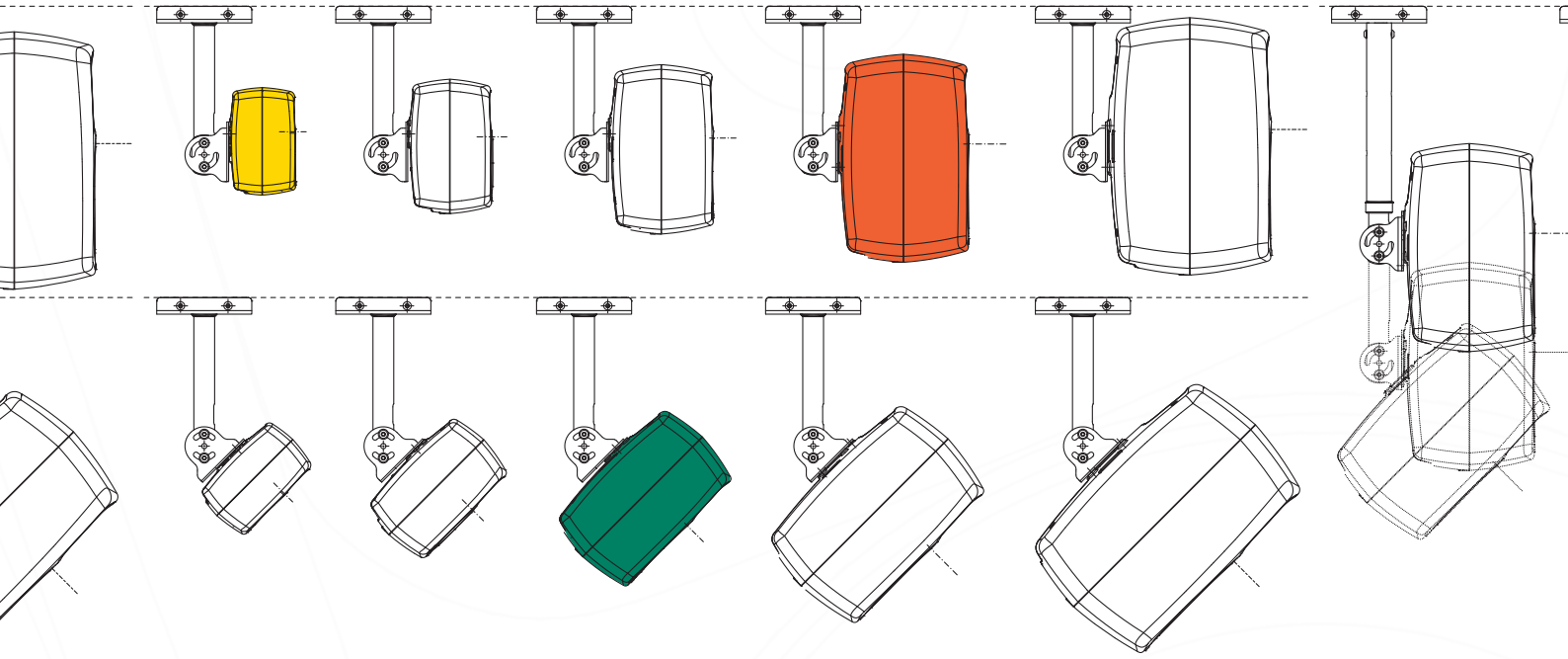

Accessories for Genelec monitors

GENELEC®

July 2016

1237

1238

1238AC

1234

1234AC

1236

7040

7050 / 7350

7360

7370

7371

8010

8020 / 8320

8030 / 8330

8040 / 8340

8050 / 8350

8351

8260

1032

1238CF / DF

Contents

Table Stands 4-5
Floor Stands 6-7
Stand Plates 8
Ceiling Mounts 9-10
Truss Mounts 11-12
Wall Mounts 8000 Series 12-13
Wall Mounts 14-16
Slotwall Mounts 17
VESA Adapter 18
Volume Control 18
Flush Mount Kits 18-19
Cable 20
Carrying Accessories 20
Accessories Table 21
8000, 4000 and G Series Monitor Models 22-23

GENELEC®

Table Stands

Short table stand

Short table stand providing a raised position for near-field monitors. Suitable for 8010, 8020, 8030 and 8040. Heavy black cast iron base with anti-vibration rubber ring, diameter 17 mm. Mounting 3/8" thread on the tube top. Preferably used together with stand plates for better positioning. The 8020 and 8030 models have an integrated 3/8" thread for possible direct fixing without stand plate. The 8040 model must be installed with a stand plate.

8000-406 Table stand (K&M 23310-370-55)

8000-406

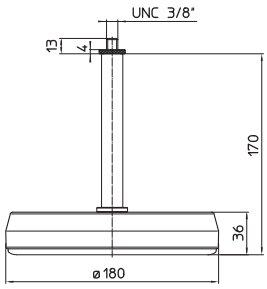

8000-406 with stand plate.

Adjustable height table stand

Adjustable height table stand for 8010, 8020 and 8030 with a base plate that can be attached to a table or flat surface. Preferably used with stand plate and Iso-Pod for better monitor orientation (see picture below). The telescopic tube length (301 to 527 mm) is designed for optimum monitor positioning behind or above computer screens. Screws and fixing nuts for a 40 mm thick table are included.

8000-425B Fixed table stand (K&M 23360-300-55)

8000-425B, Adjustable height table stand

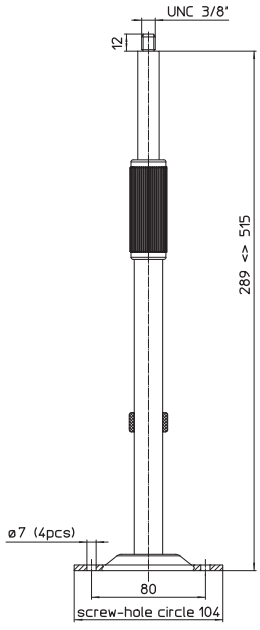

Speaker fitted on 8000-425B with stand plate.

Associated products

8030-408 *8020-408* *8010-408*

IsoPad foam base stand

Options for M Series

9110-030B IsoPad for M030, foam base incl. steel plate with 0-6-12 degrees tilting and 3/8" thread and VESA75 M4-threads

9110-040B IsoPad for M040, foam base incl. steel plate with 0-5-10 degrees tilting and 3/8" thread and VESA75 M4-threads

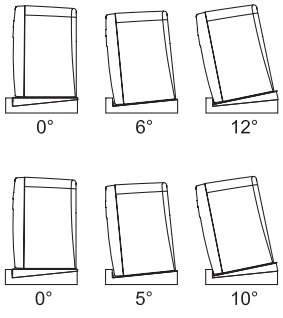

GENELEC®

Table Stands

Table stand L-shape for 8010

This stand lifts up the speaker from the table, providing less reflections from the nearby surface and eliminating the comb filtering effect. Also this accessory makes it easier to get the loudspeaker's acoustical focus towards the listening position and keep the cables in place.

8010-320B Table stand L-shape for 8010, black (K&M 23271-000-56)

8010-320W Table stand L-shape for 8010, white (K&M 23271-000-68)

8010 - L-shaped table stand measurements

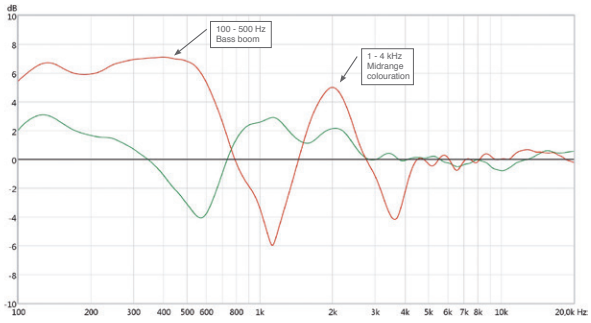

8010-320B

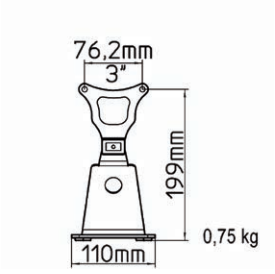

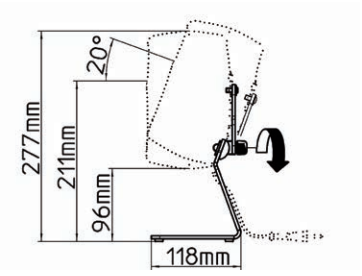

L-shape stand 8010-320W and 8010

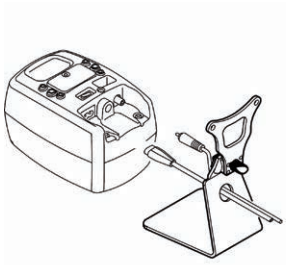

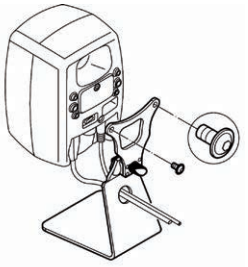

Table stand L-shape for 8020

Similar to the 8010 stand. It lifts up the speaker from the table, providing less reflections from the nearby surface and eliminating the comb filtering effect. Also this accessory makes it easier to get the loudspeaker's acoustical focus towards the listening position and keep the cables in place.

8020-320B Table stand L-shape for 8020, black (K&M 23274-015-56)

8020-320W Table stand L-shape for 8020, white (K&M 23274-015-68)

8020 - L-shaped table stand measurements

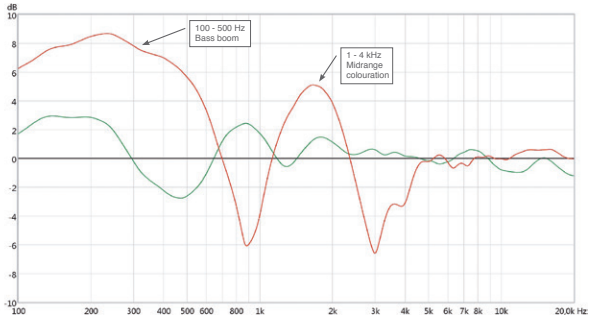

8020-320B

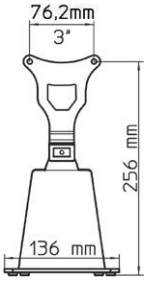

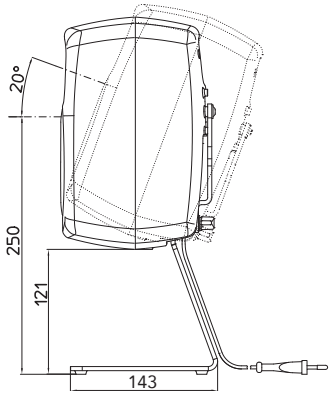

Floor Stands

Design floor stand

After a long development journey together with K&M, we can finally offer the “Genelec designed floor stand” for the 8000 Series loudspeakers. Harri Koskinen, industrial designer and partner in the design of the 8000 Series loudspeaker made the first drawings several years ago.

This very stable and elegant steel stand has a 420 x 420 mm cast base with an oversized rod combination. Gradual height adjustment is made by a superior positioning and clamping knob. Quick, uncomplicated mounting of the monitor is accomplished using the suspension device. This floor stand is mainly designed for the 8040 / 8240, 8050 / 8250 and 8351 products. Weight: 13.4 kg, Height: variable between 1100/1700 mm.

8000-400 Floor stand “Genelec design” (K&M 26785-000-56)

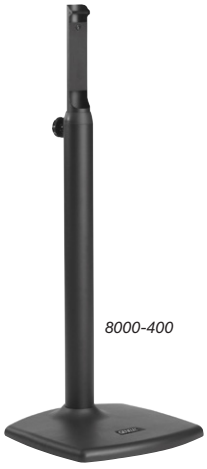

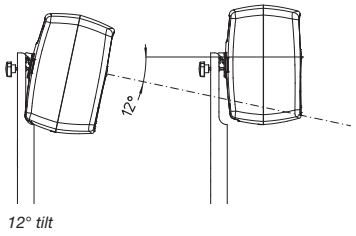

12° tilt

Floor stands

Stable steel stand with a broad round cast iron base. Base diameter is 450 mm. Adjustable in height using clamping screw and safety pin. Mounting 3/8" thread for any Genelec stand plates, from 8020 to 8050 model.
Load capacity: 35 kg. Weight: 10.6 kg. Height: 950 to 1430 mm. Packing: double cardboard packing; iron base in one and stand in the second. Suitable for all models between 8010 – 8351.

8000-409B Floor stand (K&M 26741-029-55)

Floor stand for 8010, 8020 and 8030, preferably used together with stand plates. Cast iron base with anti-vibration rubber ring. Weight: 5.4 kg. Height: 870 to 1565 mm. Base diameter: 250 mm. Packing: single cardboard box. Suitable for all models between 8010 – 8330.

8000-403 Floor stand (K&M 26000-329-55)

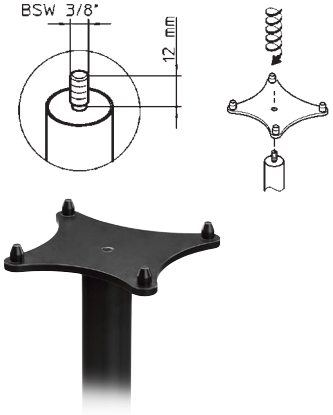

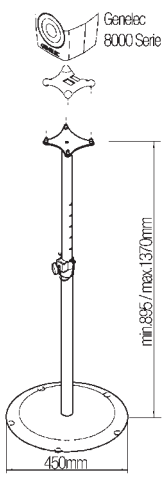

Associated products

Floor Stands

Design floor stand for 8260 and 8351

Genelec designed floor stand with variable height between 800/1350 mm, suitable for 8260 and 8351. Weight 19 kg.

8260-415B Floor stand “Genelec design” without stand plates for 8260 and 8351 (K&M 26795-000-56)

Associated products

8260-415B

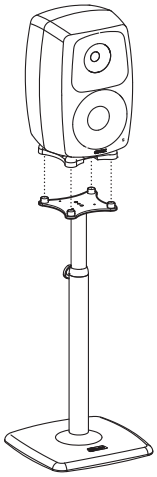

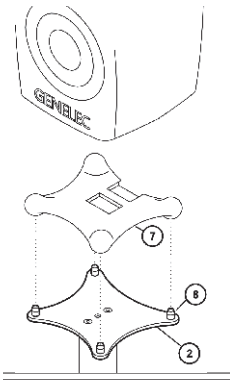

Stand plate mounting for 8351

Floor stand for 1237 monitor

Adjustable in height (35 cm) and can be tilted +/- 15°. The speaker is fixed on the stand without damage to the enclosure. Two sidebars lock the speaker to the stand with M10 screws into threads on the sides of the enclosure. The stand base has five wheels and two of them can be locked to hold the stand still.
Height (to plate): 615-950 mm. Weight: 17 kg.

1037-415B Floor stand for 1237 (K&M 45100-000-55)

1037-415B

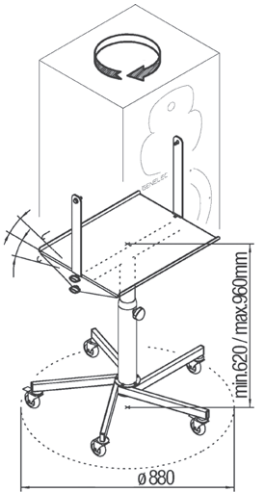

Floor stand for 1238 monitor

Adjustable in height (35 cm) and can be tilted +/- 15°. The speaker is fixed on the stand without damage to the enclosure. Two sidebars lock the speaker to the stand with M10 screws into threads on the sides of the enclosure. The stand base has five wheels and two of them can be locked to hold the stand still.
Height (to plate): 620-960 mm. Weight: 17.3 kg.

1038-415B Floor stand for 1238 (K&M 45110-000-55)

Top adapter

The existing floor stand 8000-409B together with this top-adapter can be used to support 1238CF monitors in lowered position. It’s not recommended to raise the stand in a higher position. 3/8" adapter for floor stand 8000-409B (to fit 1238CF)

1038-605 Top adapter 3/8" (K&M 26739-329-00)

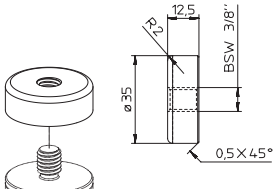

Stand Plates

Stand plates 8000 series

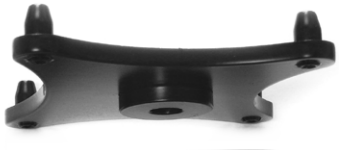

Genelec stand plates are designed for use together with the Iso-Pod that comes with all 8000 series monitors. The Iso-Pod allows you to tilt the monitor for optimal alignment. Simply mount the stand plate onto the 3/8" thread on the tube and ensure tight screw connection. Place the Iso-Pod over the four pins of the stand plate.

8010-408 for 8010 Iso-Pod (K&M 19621-329-55)
8010-408W for 8010 Iso-Pod, white (K&M 19621-329-57)
8020-408 for 8020 Iso-Pod (K&M 19622-329-55)
8030-408 for 8030/8130 Iso-Pod (K&M 19623-329-55)
8040-408 for 8040/8240 Iso-Pod (K&M 19624-329-55)
8051-408 for 8050/8250/8351 Iso-Pod (K&M19625-330-56)
8260-450B for 8260 Iso-Pod (K&M 19628-300-56)

	6010	8010	8020	8030	8040	8050 8351	8260
A	93	93	114	126	156	195	255,5
B	88	88	108	110	136	170	225
C	77	77	96	108	136	170	212,5
D	66	66	82	93	116	145	182
E	72	72	90	92	116	145	182
F	ø7,5	ø7,5	ø10	ø10	ø12	ø12	ø30
G	207	207	254	311	377	464	593

(mm)

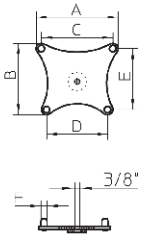

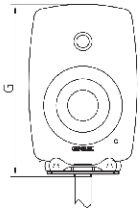

8010-408

8020-408

8030-408

8040-408

8051-408

8260-450B

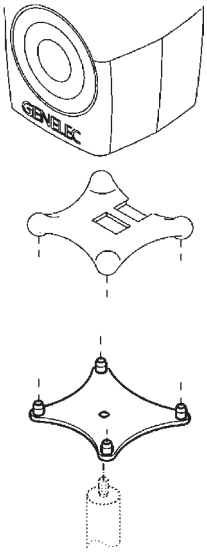

Stand plate and Iso-Pod assembly.

Genelec IsoPod™ Kit for 8000-Series

Bracket and screws included.

8010-440B for 8010, black
8010-440W for 8010, white
8020-440B for 8020, black
8020-440W for 8020, white
8030-440B for 8030, black
8030-440W for 8030, white

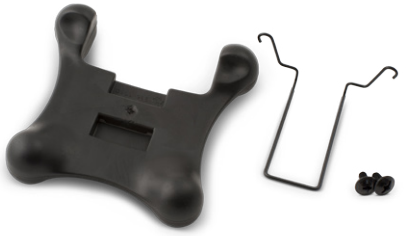

Stand plate for 1032

Stand plate for 1032 and S30D monitors. To be mounted on a stable floor stand, example 8000-409B (K&M 26741-029-55). The stand plate has a 3/8" thread insert in its centre for further stand assembly. The plate is tiltable 15° and a rear press fit bar keeps the enclosure securely fixed onto the plate.

1032-450B Stand plate for 1032 (K&M 24455-000-55)

1032-450B.
1032 stand plate mounted on floor stand.

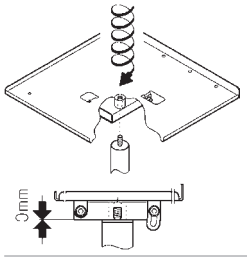

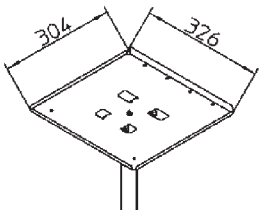

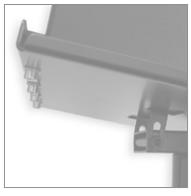

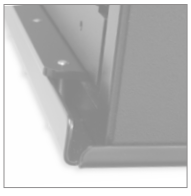

Associated product

8000-409B

GENELEC®

Ceiling Mounts

Short ceiling mount

For all 8000 series models. Available in black or white.

8000-435B Black (K&M 24485-000-55)
8000-435W White (K&M 24485-000-57)

NOTE!
This product will soon be replaced with 8000-436

8000-435B *8000-435W*

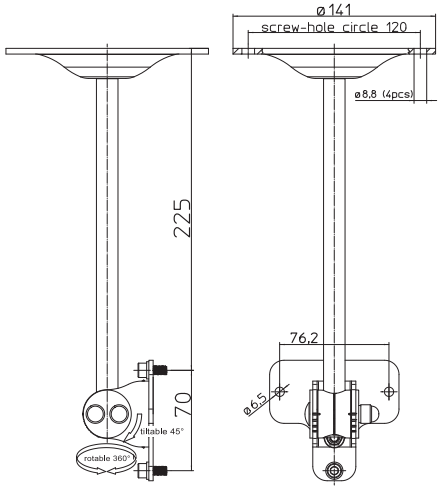

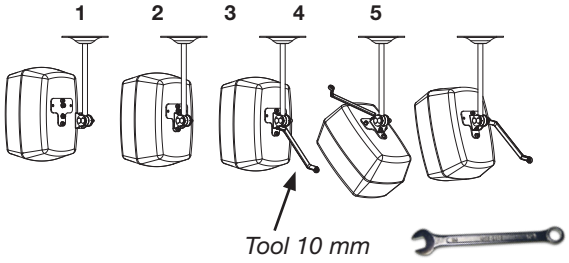

Associated product

Adapter plate for 8320 and 8330

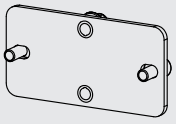

8000-452B

Short ceiling mount

For all 8000 series models. Available in black or white.

8000-436B Black (K&M 24486-000-55)
8000-436W White (K&M 24486-000-57)

New

Associated product

Needed for mounting of 8320 and 8330 only.

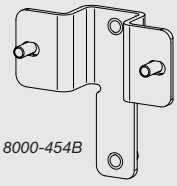

8000-454B

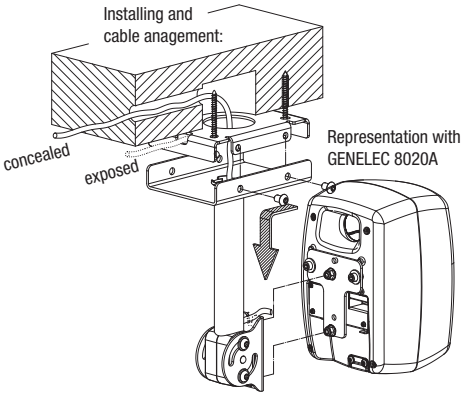

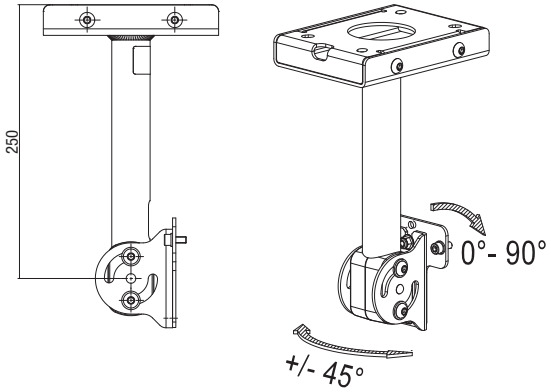

Ceiling Mounts

Short adjustable ceiling mount

Adjustable ceiling mount for all 8000 series models, possible to down tilt up to 90 degrees. The tube have openings in each end, possible to have cables in the 50 mm tube. Available in black or white.

8000-442B Adjustable ceiling mount black (K&M 24491-000-55)

8000-442W Adjustable ceiling mount, white (K&M 24491-000-57)

Associated product

Needed for mounting of 8320 and 8330 only.

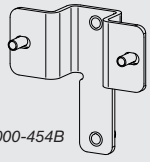

8000-454B

8000-442

New

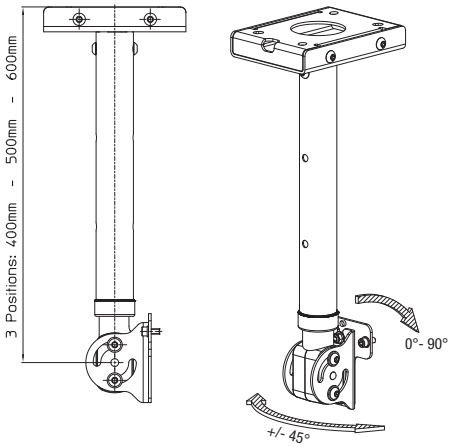

Long adjustable ceiling mount

Adjustable ceiling mount for all 8000 series models, possible to down tilt up to 90 degrees. The tube have openings in each end, possible to have cables in the 50 mm tube. Available in black or white.

8000-444B Adjustable ceiling mount black (K&M 24494-000-55)

8000-444W Adjustable ceiling mount, white (K&M 24494-000-57)

Associated product

Needed for mounting of 8320 and 8330 only.

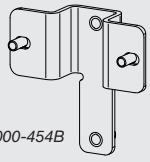

8000-454B

8000-444

New

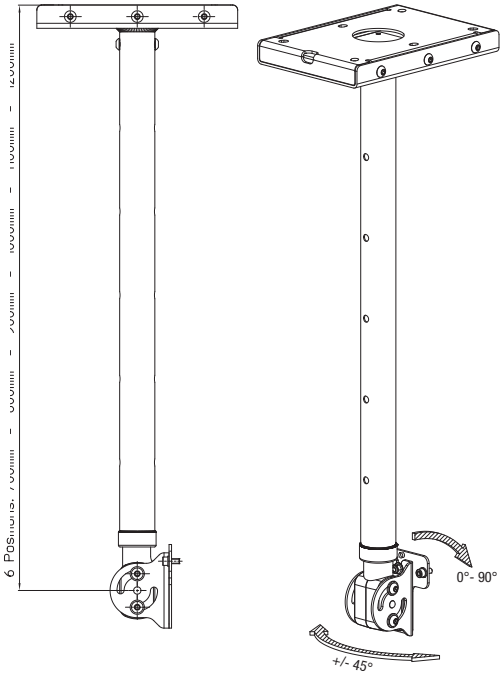

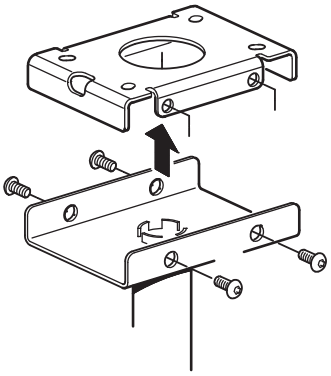

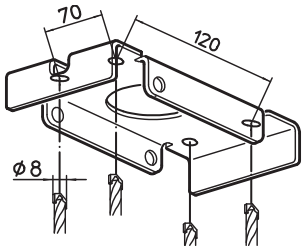

GENELEC®

Truss Mounts

Truss mount, adjustable length

New

Truss mount with adjustable length. Clamp for Ø 50 mm tube. Adaptable up to 8351 models.

8000-446B Truss mount kit (K&M 24499-000-55)

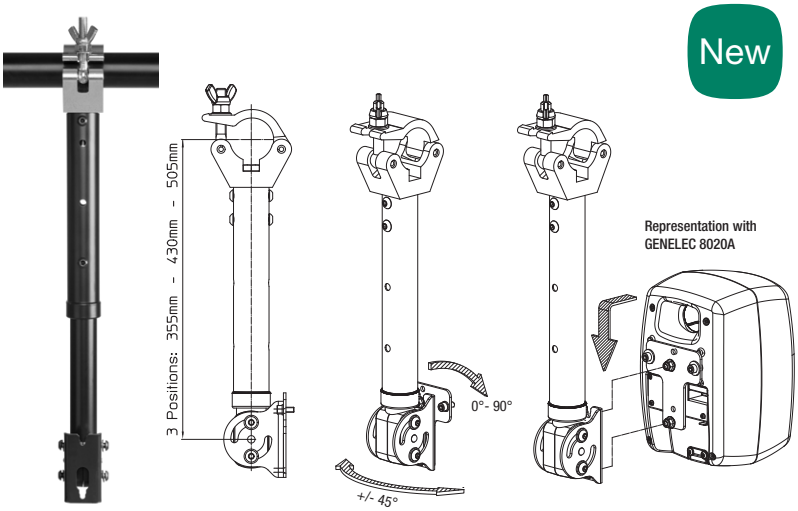

Associated product

Needed for mounting of 8320 and 8330 only.

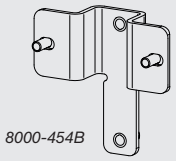

Short truss mount

New

Short truss mount with clamp for Ø 50 mm tube. Adaptable for 8000 and 4000 series.

8000-416B Short truss mount (K&M 24493-000-55)

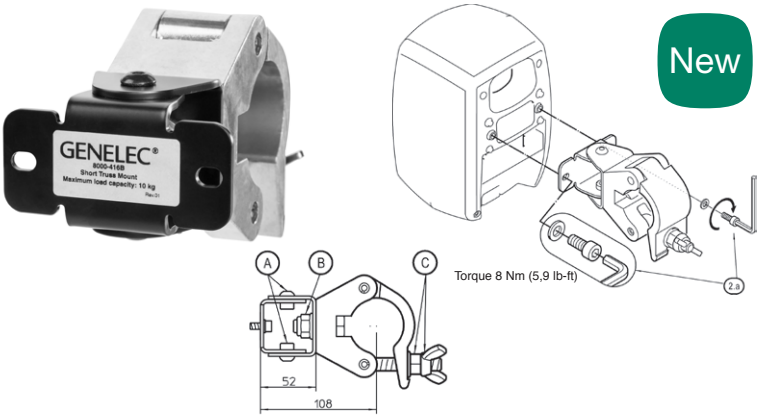

T-adapter plate

New

T-adapter plate for Genelec 8320 and 8330.

8000-454B Adapter plate (K&M 24452-000-55)

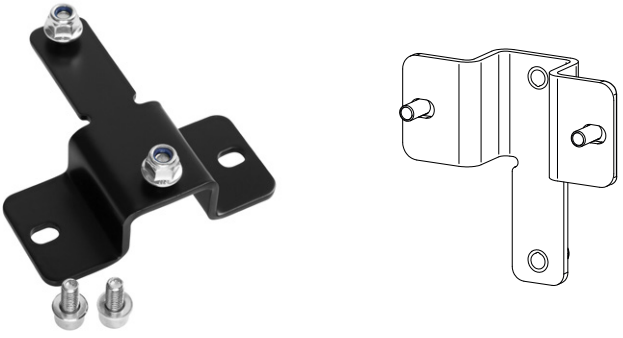

Adapter plate

New

Adapter plate for mounting Genelec 8320 and 8330 to cealing mount 8000-435.

8000-452B Adapter plate (K&M 24451-000-55)

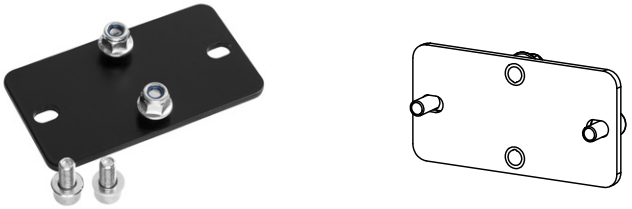

Truss Mounts

Truss Mount kit for 8260

Truss mount kit with clamp for Ø 50 mm tube for 8260.

8260-465B Black (K&M 24492-000-55)

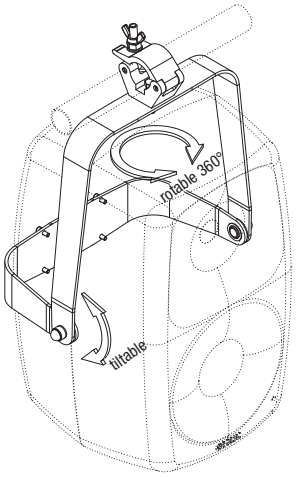

Wall Mounts 8000 Series

Fixed wall mount

Wall mount bracket for 6010. Tiltable 30°. Available in black and white. Included with each 6010.

6010-410B Black
6010-410W White

Fixed wall mount

Wall mount for 8020 and 8030/8130. Available in black and white. Included with each 8020.

8000-410B Black
8000-410W White

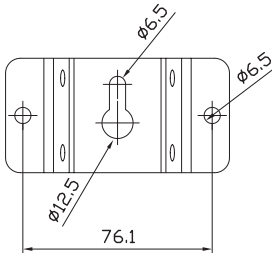

Adjustable wall mount

Wall mounting bracket for 8040/8340.
Available in black.

8000-401B Black (K&M 24180-000-55)

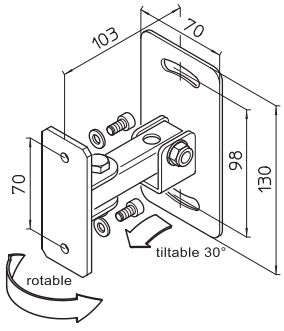

GENELEC®

Wall Mounts 8000 Series

Adjustable wall mount with T-plate

Wall mount bracket for 8010, 8020 and 8030.
Available in black and white.

8000-422B Black (K&M 24160-000-56)
8000-422W White (K&M 24160-000-66)

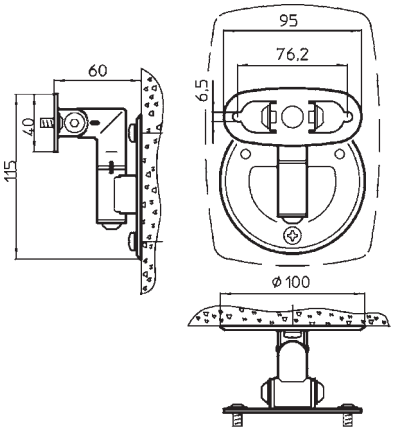

Adjustable wall mount

Wall mounting bracket for 8000 series. Available in black and white. 8X40 and 8X50 do not need the included T-plate.

8000-402B Black (K&M 24475-000-55)
8000-402W White (K&M 24475-000-57)

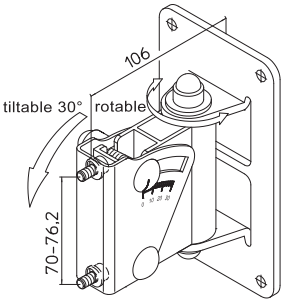

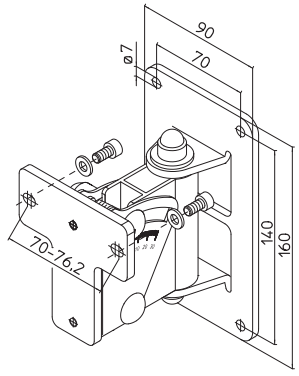

Wall mount 8260 and 8351

Wall mount for 8260 and 8351, including holes for VESA 100. The mounting plate can be rotated 90°.

8000-424B Black (K&M 24478-015-55)

New

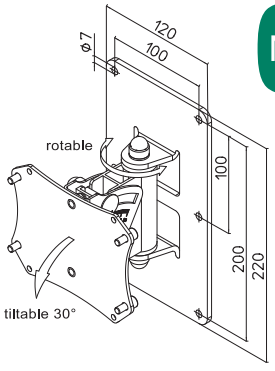

Wall Mounts

Wall mount 1032

Wall mount for 1032 (also S30D). Tiltable 15° and adjustable for correct monitor positioning. Holds the enclosure securely with a rear press fit bar.

1032-460B Black (K&M 24453-000-55)

1032-460B Wall Mount

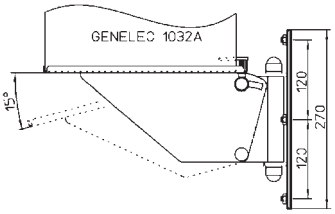

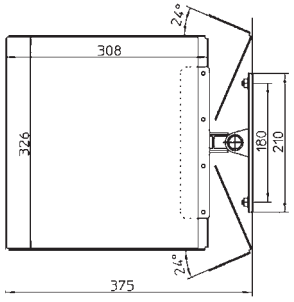

Wall mount for 1237 monitor

Can be horizontally turned +/- 35° and tilted 0-35° in fixed 5° steps. The speaker is fixed on the wall mount without damages to the enclosure. Two sidebars lock the speaker to the stand with M10 screws into threads on the sides of the enclosure.
Weight: 11.4 kg.

1037-414B Black (K&M 24457-000-55)

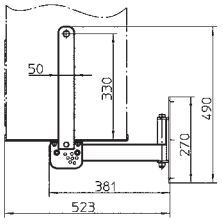

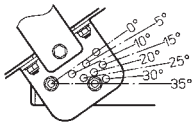

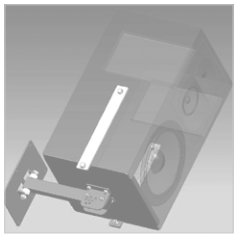

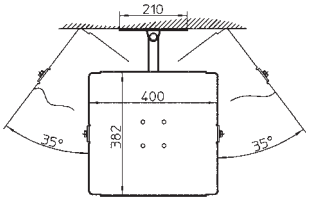

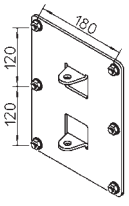

Wall Mounts

Adapter plate for F1 (5040) Subwoofer

Large cable bundle laying on the floor are common in most installations. Considering that a fully connected F1 features 13 different cables, we felt these cables do not necessarily need to lie on the floor. Why not placing the F1 subwoofer ON the wall, UNDER a table or even UNDER the ceiling… This can now be achieved using the F1 adapter plate. As a basic physical fact, the mounting surface needs to be as solid and flat as possible. You can download mounting descriptions from www.genelec.com

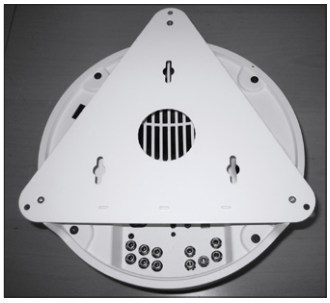

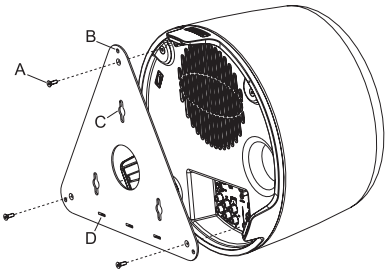

5040-410B Black
5040-410W White

Wall mount 1238CF

Wall mount for 1238CF only.

1038-437B Black (K&M 24477-000-55)

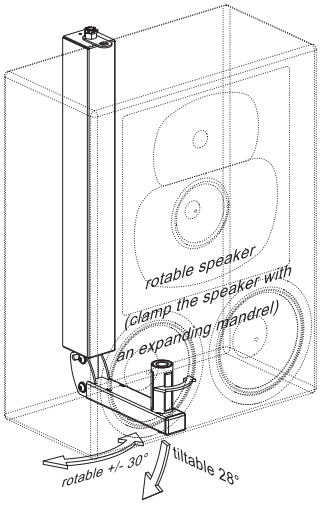

Security wire

Security wire with hook for secure truss mounting. Length 820 mm, 3.2 mm wire.

8000-432 Security wire SW-02

Wall Mounts

Wall mount adapter

Practical plastic adapter to which it is easy to attach a Slotwall arm and additional Stand-plate. The adapter is attached to the wall using 3 screws. An additional security screw ensures that the product support arm is stable and held in place. Can handle weight of up to 8250 models. Dimensions 101 x 84 x 18 mm.

8000-909B Wallmount adapter, black, for Slotwall brackets 8000-902B and 8000-904B (K&M 44060-000-55)

Associated products

8051-408 *8040-408* *8030-408* *8020-408* *8010-408*

8000-902B *8000-904B*

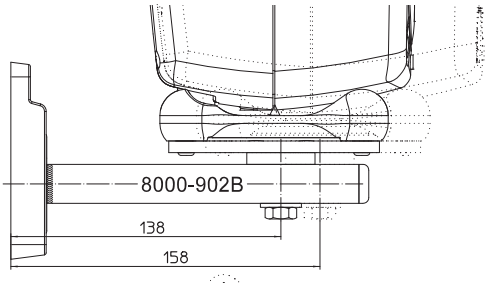

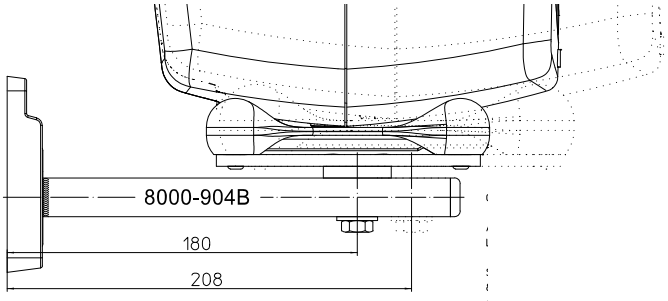

GENELEC®

Slotwall Mounts

Slotwall brackets

Slotwall brackets for 8000 series monitors. Each bracket can support one stand plate to allow easy positioning and angling of the monitors.

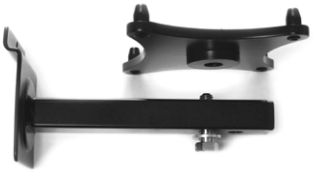

Short slotwall bracket

Slotwall bracket for 8010, 8020 and 8030/8130.

8000-902B (K&M 44102-029-55)

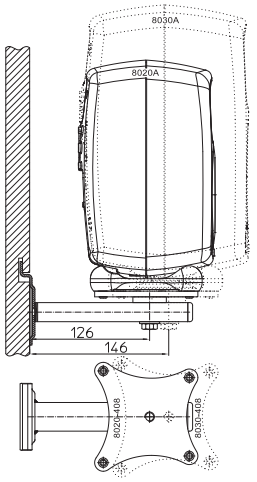

8020 and 8030/8130 on short slotwall bracket.

Long slotwall bracket

Slotwall bracket for 8040/8240 and 8050/8250.

8000-904B (K&M 44104-029-55)

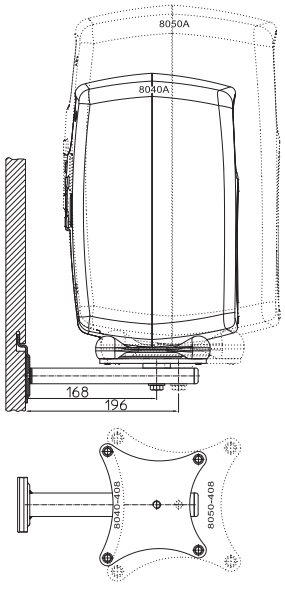

8040/8240 and 8050/8250 on long slotwall bracket.

Associated products

8051-408 *8040-408* *8030-408* *8020-408* *8010-408*

Simple slotwall bracket

Slotwall bracket for 8020 and 8030/8130.

MAI-0076 Bracket for 8020 and 8030/8130.

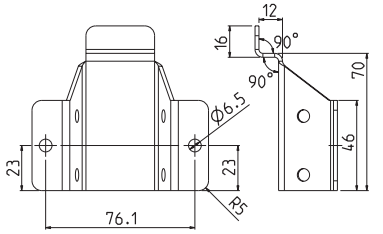

Simple Slotwall bracket used for hanging one 8020 or 8030/8130 in a fixed position.

Vesa-Adapter

VESA-adapter for 8000-series

Today many broadcast environments and post-production studios have changed the way of installing video monitors. Instead of using 19" rack systems such LCD /Plasma screens are now placed in so-called flat “media walls”. All of them feature the international mechanical mounting system called VESA standard.
We all know pictures need to be completed with sound, and therefore we have made a simple adapter fitting all Genelec 8000-speakers. With this small adapter one can mount 8000 series monitors into any kind of VESA 75/100 based accessories.

8000-437B VESA adapter 75/100 mm (K&M 24483-015-55)

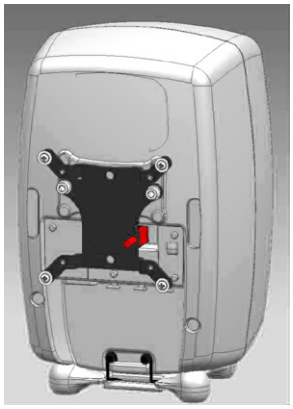

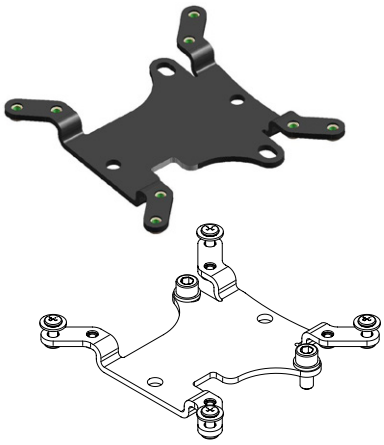

Flush Mount Kits

Flush mount kit for 8000-series

Genelec Flush mount kits are designed for mounting Genelec 8000-series monitors into a sturdy wall structure without changing the acoustic performance of the product. They may not be used for any other purpose.

8030-xxx Drawing for flush mount kit 8030 / 8330
8040-450B Flush Mount Kit for 8040 / 8240
8050-450B Flush Mount Kit for 8050 / 8250 / 8351
8260-470B Flush Mount Kit for 8260, complete

Drawing for 8030 flush mount

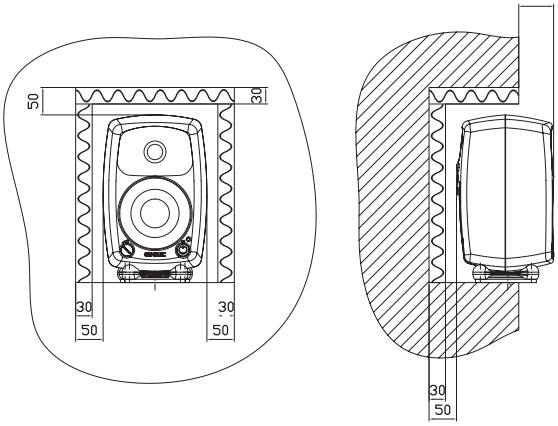

GENELEC®

8040-450B

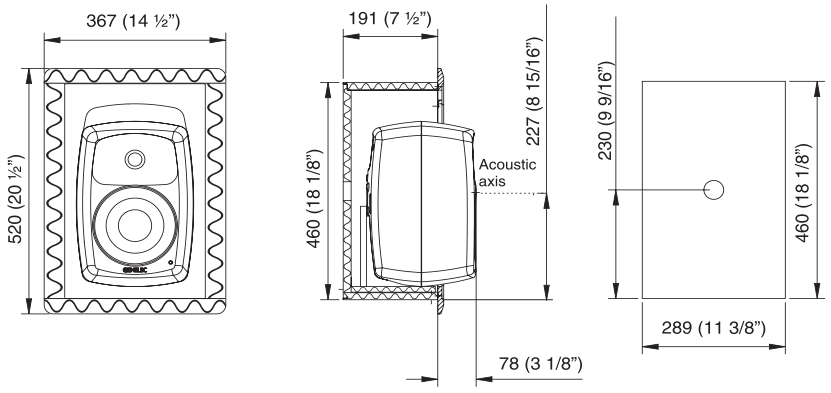

8260-470B

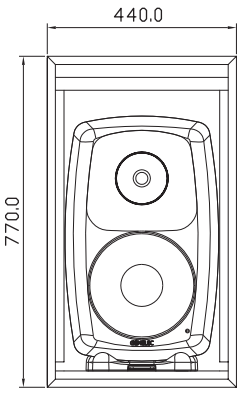

8050-450B

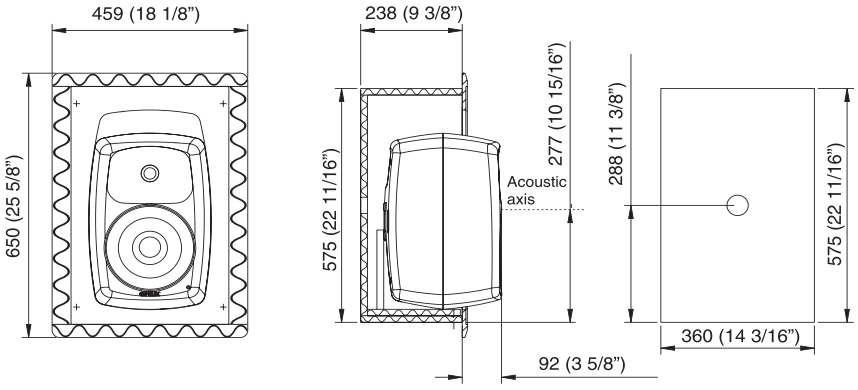

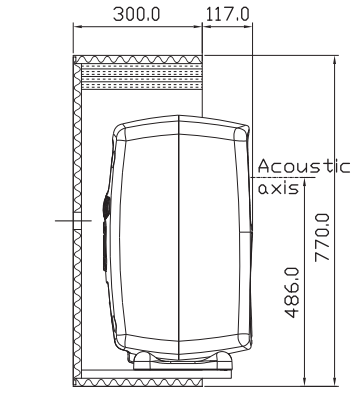

Showing 8351 mounted in 8050-450B

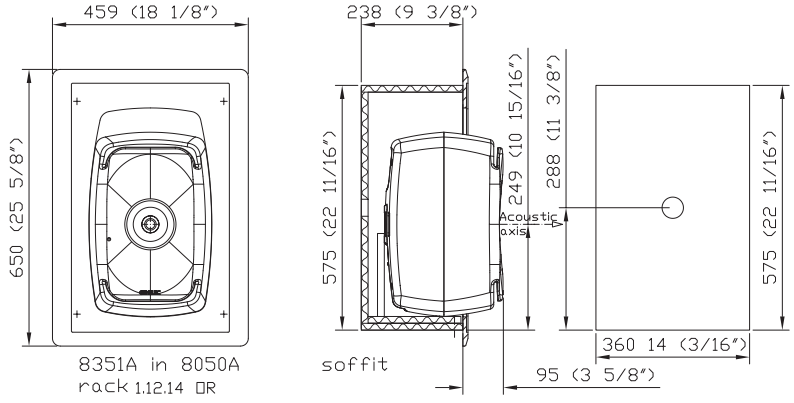

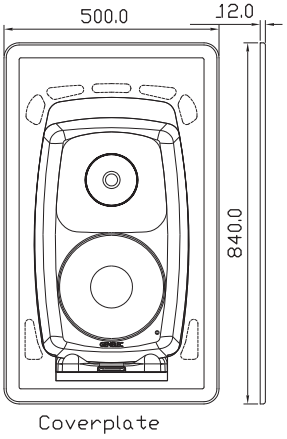

Cable

Active monitor hybrid cable

For several years the market has been requesting an easy-to-install cable for active monitors. We have developed a small and installation-friendly hybrid cable that features power and signal in two isolated shield packed in the hybrid cable. Power is 3 x 0,85 mm² and signal is double shielded 110 Ohm AES/EBU cable which can also handle analogue signal.

1510-303B Hybrid cable black, 100 m reels
1510-303W Hybrid cable white, 100 m reels

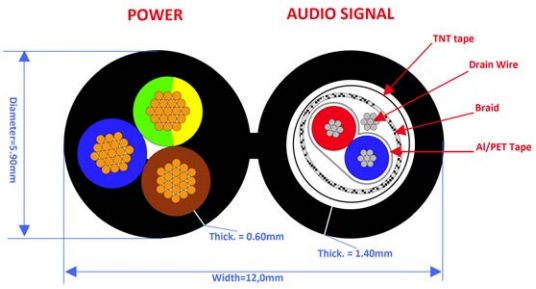

Composite

Construction	1 x Audio + 1 x Power, parallel, splitable
Jacket	PVC, black
Dimensions	12.0 mm x 5.9 mm
Weight	97g/m
Working Temperature	-25 °C / +70 °C

Signal Cable

Conductor	7 x 0.20 mm (AWG24) tinned copper
Conductor Area	0.22 mm²
Insulation	Foam-Skin-PE
Shielding	AL/PETP foil + tinned stranded drain wire + tinned copper braid, coverage 85%
Jacket	PVC, black, Ø 5.9 mm

Power Cable 3x0.85 mm²

Conductor	bare copper, 19 x 0.24mm
Conductor Cross Section	0.86 mm² (AWG 18)
Insulation	PVC
Number of Cores	3
Jacket	PVC, black, Ø 5.9 mm

Carrying Accessories

Bags for Genelec Loudspeakers

Soft transportation bags for Genelec loudspeakers.

5040-421 Soft carrying bag for one F1 sub woofer
8010-424 Soft carrying bag for two 8010 monitors
8020-423 Soft carrying bag for two 8X20 monitors
8030-423 Soft carrying bag for two 8X30 monitors
8040-423 Soft carrying bag for two 8X40 monitors
8050-423 Soft carrying bag for one 8X50 monitor

Bag for two 8010.

Accessories

Order code	Description	Brand / part no	8010 4010/G1	8X20 4020/G2	8X30 4030/G3	8X40 4040/G4	8X50/51 G5	8260	Other
	Floor Stands								
8000-409B	Floor stand (950 - 1430 mm)	K&M 26741-029-55	X	X	X	X	X		
8000-403	Floor stand (mic stand)	K&M 26000-329-55	X	X	X				
1037-415B	Floor stand for 1237 monitor	K&M 45100-000-55							1237
1038-415B	Floor stand for 1238 monitor	K&M 45110-000-55							1238
8000-400	Genelec Design stand	K&M 26785-000-56			X (2)	X	X		
8260-415B	Floor stand for 8260	K&M 26795-000-56					X (1)	X (1)	
	Table Stands								
8000-406	Short table stand (17 cm)	K&M 23310-370-55	X	X	X	X (1)			
8000-425B	Adjustable height table stand (301-527 mm)	K&M 23360-300-55	X	X	X	X (2)			
8010-320B/W	Table stand L-shape for 8010, black / white	K&M 23271-000-56/-68	X						
8020-320B/W	Table stand L-shape for 8020, black / white	K&M 23274-015-56/-68		X					
	Stand Plates								
8010-408/W	Stand plate for 8010, black / white	K&M 19621-329-55/-57	X						
8020-408	Stand plate for 8020	K&M 19622-329-55		X					
8030-408	Stand plate for 8030 / 8130	K&M 19623-329-55			X				
8040-408	Stand plate for 8040 / 8240	K&M 19624-329-55				X			
8051-408	Stand plate for 8050 / 8250 / 8351	K&M 19625-330-56					X		
8260-450B	Stand plate for 8260	K&M 19628-300-56						X	
1032-450B	Stand plate for 1032 (S30D)	K&M 24455-000-55							1032
	Ceiling Mount								
8000-435B/W	Short ceiling mount, black / white	K&M 24485-000-55/-57	X	X	X	X	X		
8000-436B/W	Short ceiling mount, black / white	K&M 24486-000-55/-57	X	X	X	X	X		
8000-415B	Adjustable height ceiling mount (905-1505 mm)	K&M 24490-000-55	X	X	X	X	X		
8000-442B/W	Short adjustable ceiling mount, black / white	K&M 24491-000-55/-57	X	X	X	X	X		
8000-444B/W	Long adjustable ceiling mount, black / white	K&M 24494-000-55/-57	X	X	X	X	X		
8000-446B	Truss mount kit, adjustable length, black	K&M 24499-000-55	X	X	X	X	X		
8000-416B	Short truss mount with clamp	K&M 24493-000-55	X	X	X	X	X		
8000-454B	T-adapter plate	K&M 24452-000-55		X	X				
8000-452B	Adapter plate	K&M 24451-000-55		X	X				
8260-465B	Truss mount kit, black	K&M 24492-000-55						X	
	Wall Mount								
8000-401B	Wall mount, black	K&M 24180-000-55				X			
8000-422B/W	Wall mount with T-plate, black / white	K&M 24160-000-56/-66	X	X	X				
8000-402B/W	Wall mounting bracket, black / white	K&M 24475-000-55/-57	X	X	X	X	X		
6010-410B/W	Wall mount bracket (included in 8010), black / white	Genelec	X						
8000-410B/W	Wall mount (simple bracket), black / white	Genelec	X	X	X				
8000-424B	Wall mount for 8260 and 8351	K&M 24478-015-55						X	8351
1032-460B	Wall mount for 1032 (S30D)	K&M 24453-000-55							1032
1037-414B	Wall mount for 1237 monitor	K&M 24457-000-55							1237
1038-437B	Wall mount for 1238CF	K&M 24477-000-55							1238CF
5040-410B/W	Adapter plate for 5040 Subwoofer, black / white	Genelec							5040
8000-909B	Wall mount adapter for slotwall brackets, black	K&M 44060-000-55	X	X	X	X	X		
	Flush Mount								
8030-xxx	Drawing for flush mount kit 8030 / 8330	Genelec			X				
8040-450B	Flush mount kit for one 8040 / 8240	Genelec				X			
8050-450B	Flush mount kit for one 8050 / 8250 / 8351	Genelec					X		
8260-470B	Flush mount kit for one 8260	Genelec						X	
	VESA Adapter								
8000-437B	VESA adapter 75/100 mm	K&M 24483-015-55	X	X	X	X	X		
	Other								
8000-419B	Adapter for 36 mm tubes to 3/8"	K&M 24521-900-55	X	X	X	X	X		
1038-605	Top adapter 3/8" for floor stand 8000-409B to fit 1238CF	K&M 26739-329-00							1238CF
8000-432	Security wire for truss mounts	SW-02							
	Carrying Accessories								
5040-421	Soft carrying bag for one F1	Genelec							5040
8010-424	Soft carrying bag for 2 pcs 8010	Genelec	X						
8020-423	Soft carrying bag for 2 pcs 8X20	Genelec		X					
8030-423	Soft carrying bag for 2 pcs 8X30	Genelec			X				
8040-423	Soft carrying bag for 2 pcs 8X40	Genelec				X			
8050-423	Soft carrying bag for one 8X50	Genelec					X		
	Slotwall Mounts								
8000-902B	Slotwall bracket 8020 - 8030 / 8130	K&M 44102-029-55	X	X	X				
8000-904B	Slotwall bracket 8040 / 8240 - 8050 / 8250	K&M 44104-029-55				X	X		
MAI-0076	Slotwall bracket, simple 8020 and 8030 / 8130	Genelec	X	X	X				

(1) = Stand plate needed. (2) = not recommended

8000 and 4000 Series Monitor Models

6010
G1

8010
4010

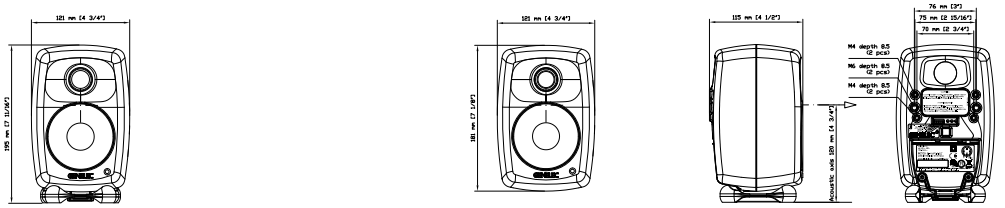

8020
G2
4020

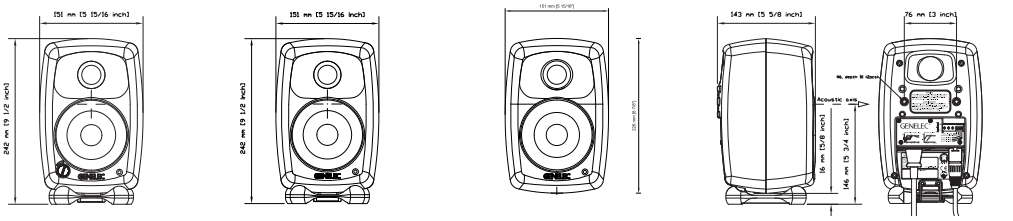

8030
G3
4030

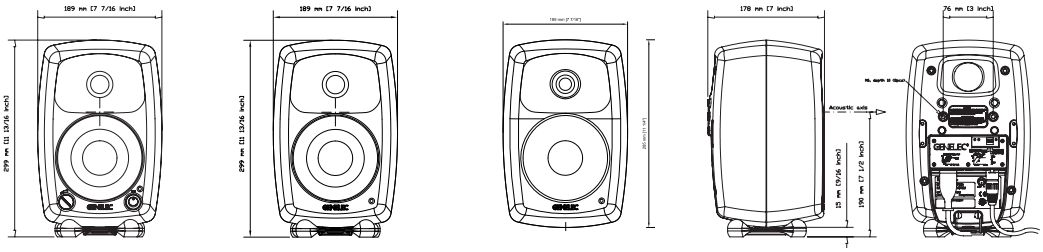

8040
G4
4040

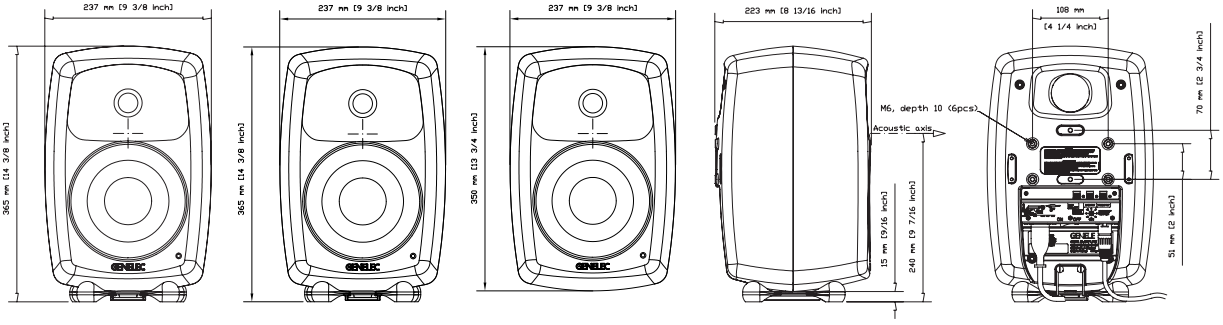

GENELEC®

8050
G5

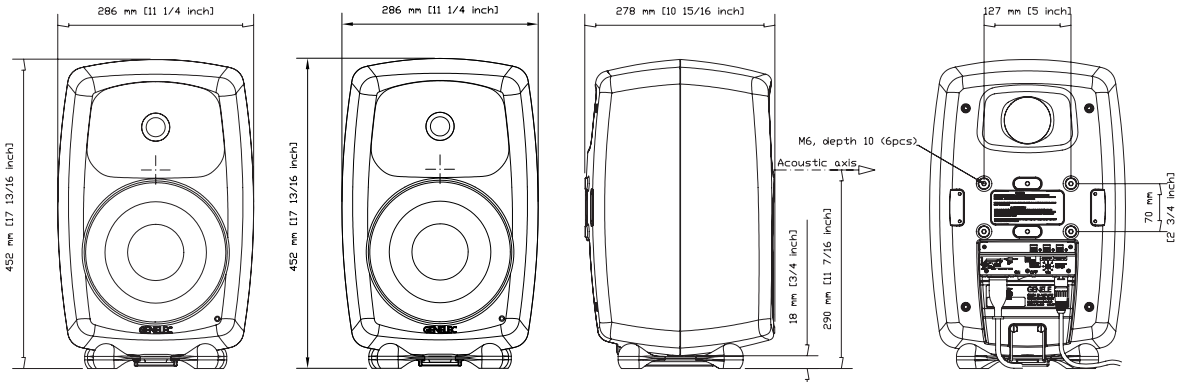

8351

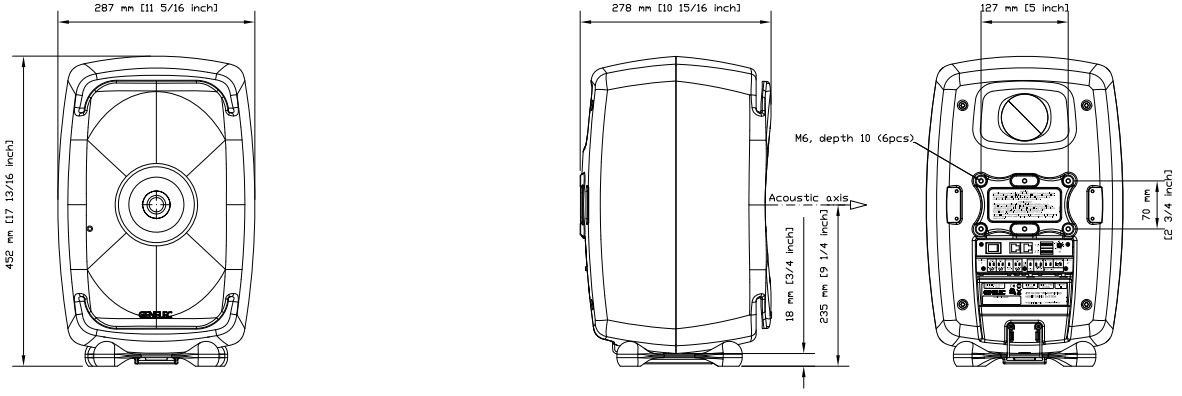

8260

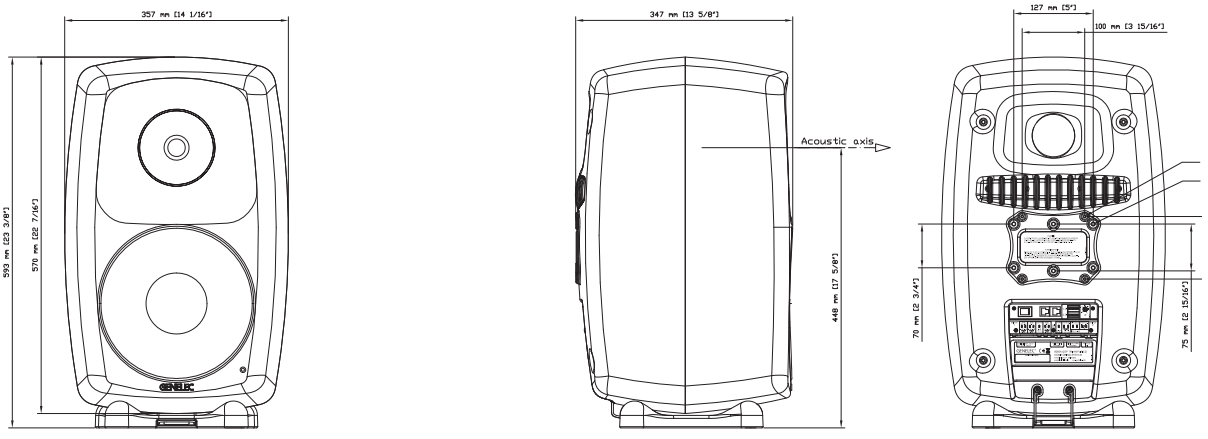

GENELEC®

the sonic reference

www.genelec.com

Genelec Document BBAGE045f. Copyright Genelec Oy 07.2016. All data subject to change without prior notice.

International enquiries
Genelec, Olvitie 5
FIN-74100, Iisalmi, Finland
Phone +358 17 83881
Fax +358 17 812 267
Email genelec@genelec.com

In the U.S. please contact
Genelec, Inc., 7 Tech Circle
Natick, MA 01760, USA
Phone +1 508 652 0900
Fax +1 508 652 0909
Email genelec.usa@genelec.com

In China please contact
Beijing Genelec Audio Co. Ltd.
Jianwai SOHO, Tower 12, Room 2306
39 East 3rd Ring Road
Chaoyang District
Beijing 100022, China
Phone +86 10 5869 7915
Fax +86 10 5869 7914

In Sweden please contact
Genelec Sverige
Ellipsvägen 10B
P.O. Box 5521, S-141 05 Huddinge
Phone +46 8 449 5220
Fax +46 8 708 7071
Email info@genelec.com